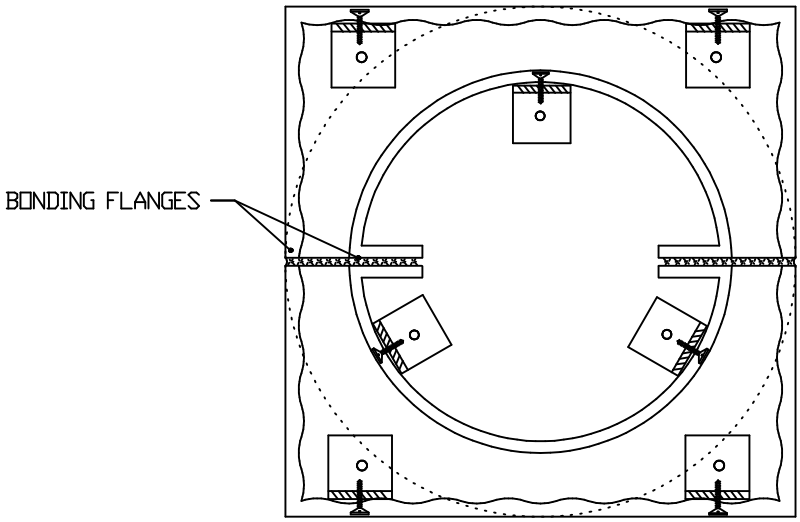

BASE ATTACHMENT AND FLANGE DETAILS

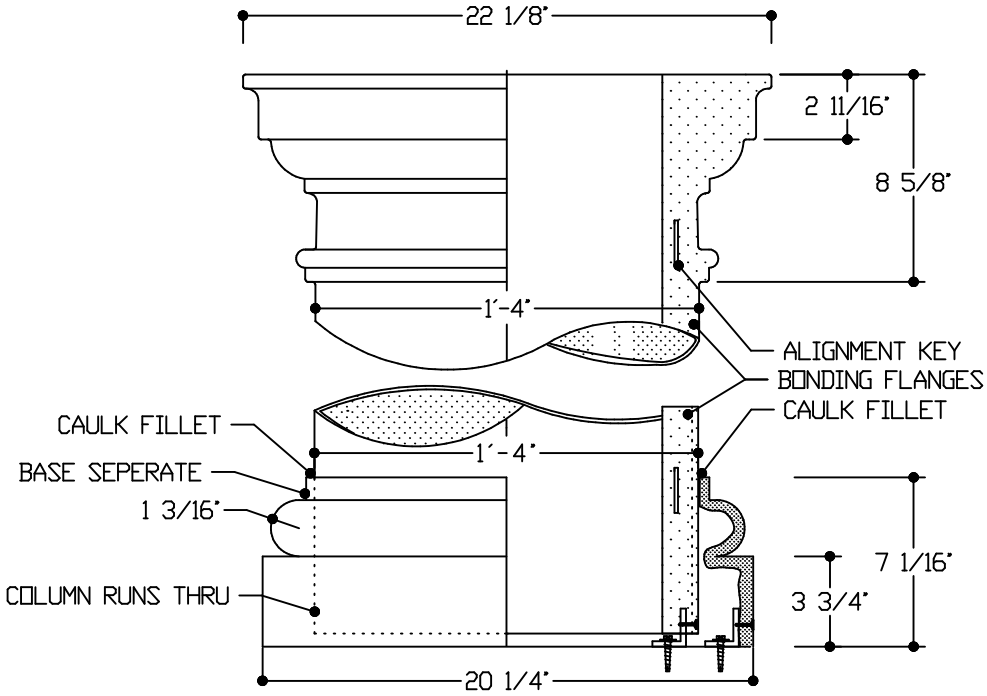

S-13-SS-T

FLORIDA COLUMNS

MANUFACTURED BY:

© ALL RIGHTS RESERVED

SPAULDING CRAFT INC.
TEL 727-726-2316 FAX 725-2897